HS1000-00 Series

Multi-axis Precision Translation Stage

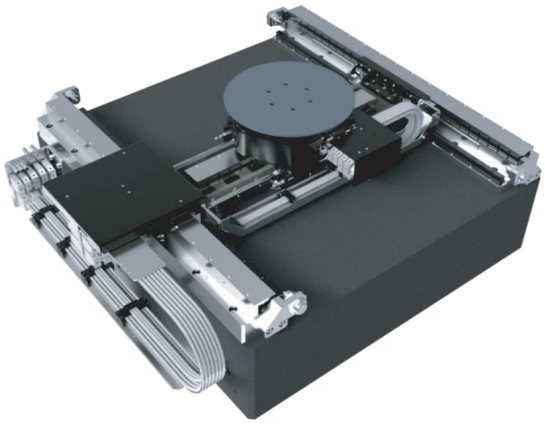

Main Feature

- Integrated 5-axis platform, orthogonal design
- Micron level flatness and straightness
- High-rigidity & precision guide rail design
- High-performance air bearing guide
- Cable disturbance force consistency design
- Excellent dynamic flatness

Performance Instruction

The multi-axis precision translation stage is a two-dimensional mechanical guide + air bearing composite motion platform. In order to allow customers to effectively enjoy the respective advantages of mechanical guide rails and air bearing guide rails, mechanical guide rails are used in XY-axis.
The high rigidity plane can withstand large accelerations and provide high bi-directional repeatability, while the air bearing ensures excellent dynamic flatness throughout the entire travel. The platform adopts design concepts such as modularity and orthogonality, and includes Hidden MZT module and composite XY stage module.
The MZT module is integrated on the composite XY stage module, which can realize high-precision, high-stiffness linear and rotational motion with 4 degrees of freedom in the X, Y, Z and T axes. The vertical direction of the MZT module adopts a unique large-stroke magnetic levitation gravity compensation. Technology reduces the load on the vertical motor and greatly improves the vertical motion performance and lifespan. The composite XY stage module adopts drive centroid matching, flexible gantry and lightweight design technology, which has the ability to reduce the impact of the eccentric center of mass on high-precision mechanical guide rails, improve the reliability and life of the motion system, and has the ability to support slight translation of Y1 and Y2 motors Perform deflection correction function.

Main Application

- Particle drawing process control applications, such as optical critical dimension inspection and film metrology
- Partical return laser heat treatment
- Photolithography backend
- Circle marking and cleaning

Mechanical Dimensional Drawing

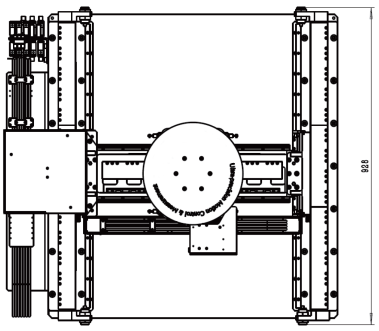

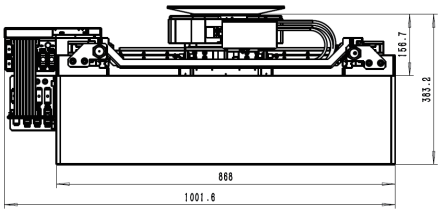

Limotion Systems
라 이 모 션

Specifications

		HS1000-00			
Axes Name		X	Y1/Y2	Z	T
Travel		320 mm	550 mm	10 mm	360 °, Infinite
Maximum Speed		1.2 m/s	1.2 m/s	0.1 m/s	900 °/s
Maximum Acceleration		12 m/s^2	12 m/s^2	2 m/s^2	6280 °/s^2
Position accuracy full stroke	indicative value	±10 µm	±10 µm	NA	±30 arcsec
	calibration	±1 µm	±1µm	±0.6 µm	±3 arcsec
Bidirectional Repeatability		±0.4 µm	±0.4 µm	±0.3 µm /2 mm ±1µm over rang	±2 arcsec
Position stability (3σ)		±25 nm*	±25 nm*	±15 nm*	±0.2 arcsec
Straightness		±2µm over rang	±1.5µm over rang	2 µm	NA
XY Flatness (P-P)		NA	NA	NA	NA
Axial Error Motion		NA	NA	NA	±1.5 µm
Radial Error Motion		NA	NA	NA	±1.5 µm
Mechanical Specifications					
Moving Mass (without payload)		15 Kg	30 Kg	5.5 Kg	NA
Max Load Capacity		2Kg/ Can be customized			
Stage Mass		666 Kg			
Dimension		928 mmX1001.6 mmX383.2 mm (Chuck suction surface to marble 155.2 mm)			

*Using 8µm pitch grating scale test data.

Customized Information

Multi–axis precision translation stage options : In the HS1000–00 product series, options are configured that can be selected according to the user's actual application. Optional content includes active vibration isolation system, encoder, control systems, etc.

Table 1 Encoder options

-S1	Incremental analog optical linear encoder, 1Vpp
-S2	Incremental digital optical linear encoder, RS422
-S3	Absolute optical linear encoder, BISS